Chlorine dioxide: effective, broad-spectrum biocide for white-water systems

Cheryl L. Latshaw

ABSTRACT: Chlorine dioxide is an effective disinfectant in shingle-mat white-water systems. It provides a rapid, broad-spectrum kill of slime-forming microorganisms at pH 4–10 by interrupting their protein synthesis. Moreover, chlorine dioxide is effective at lower levels than chlorine. Since chlorine dioxide is a gas, it must be generated on site via the gaseous-chlorine method or the three-pump method. The output from a single generator can be directed to several feed points. The feed rate is easy to control and monitor using simple field tests.

KEYWORDS: Biological control, characteristics, chlorine dioxide, microorganism control, oxides, physical properties, white water system, properties.

The first commercial use of chlorine dioxide as a biocide and disinfectant was in the early 1940s, when the city of Niagara Falls added it to drinking water for taste and odor control. Since that initial application, the use of chlorine dioxide has expanded significantly, and it is now used in over 600 plants and municipalities throughout the United States *(1)*.

Chlorine dioxide overview

Physical characteristics

Chlorine dioxide is a gas that is soluble in water. At low concentrations, the color of the solution is yellow–green, changing to orange–brown at higher concentrations. The odor is similar to chlorine but more pungent. The solubility of chlorine dioxide gas in water is 2.9 g/L (2900 mg/L) at room temperature and 30-mm partial pressure *(1)*.

Properties

Chlorine dioxide has unique properties that make it a good broad-spectrum biocide. It is virtually pH independent and is effective at pH 4–10. Chlorine dioxide kills slime-forming microorganisms by interrupting their protein synthesis. Unlike chlorine, it does not react with ammonia, organic nitrogen, or water. Thus the presence of ammonia in the white water does not create an additional demand for chlorine dioxide.

Gaseous chlorine dioxide is sensitive to pressure and temperature, so it is impossible to ship in bulk. Moreover, its low solubility and photosensitivity make it impractical to sell chlorine dioxide solutions. Chlorine dioxide must be generated on site.

Advantages of chlorine dioxide

Chlorine dioxide offers many advantages as a biocide in white-water systems. Bromine and chlorine react with organic materials to form bromoform or chloroform and trihalomethanes. In contrast, chlorine dioxide does not react with organics, so no chloroform or other trihalomethanes are formed. Trihalomethanes are listed as suspected carcinogens and are limited to 100 ppb in drinking water by the U.S. Environmental Protection Agency.

Chlorine dioxide is not stored at the plant site. Only the chemicals used to generate chlorine dioxide are stored at the plant. As the liquid chlorine dioxide solution is generated, it is easily fed to the white-water system through a PVC (polyvinyl chloride) line.

Analysis of chlorine dioxide residuals is easily done using a simple drop test or a spectrophotometer. The test methods are similar to those used to run chlorine. Either method can be run at the plant site.

Latshaw is a senior product specialist with Ashland Chemical Co., Drew Industrial Division, 3155 Fiberglass Rd., Kansas City, KS 66115.

1. Gaseous-chlorine generator

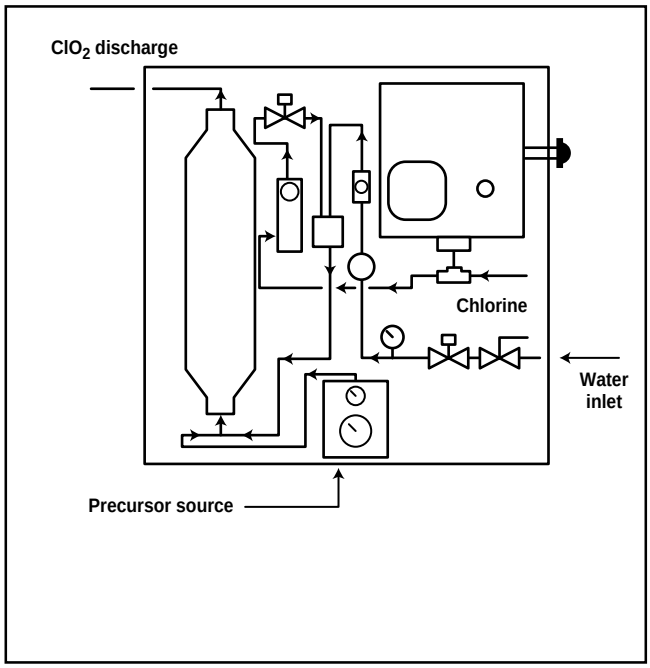

2. Three-pump generator

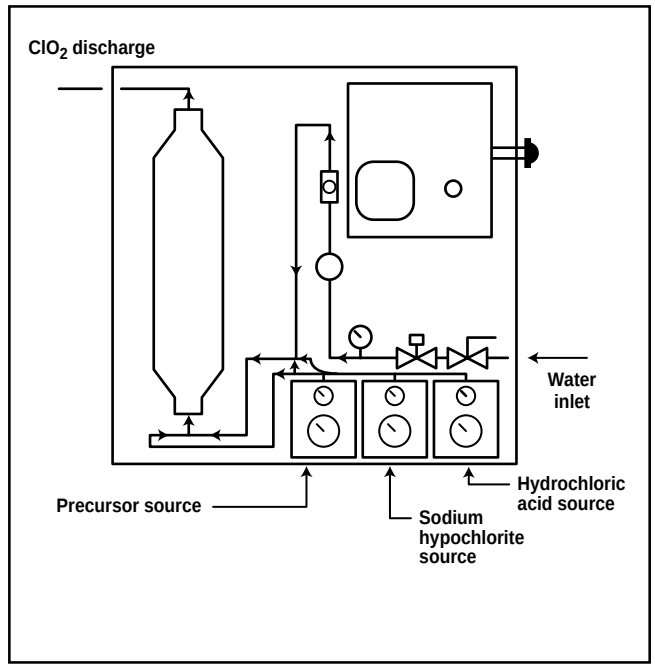

Chlorine dioxide is effective over a wide pH range; it does not react with water; and it does not lose its bactericidal efficiency at higher pH levels. In shingle-mat white-water systems, chlorine dioxide is an especially effective biocide because it does not react with water or with ammonia. Thus ammonia can be added as part of the shingle-mat production process.

Applications

Chlorine dioxide has proved to be an excellent biocide in many applications and an effective oxidant in several wastewater applications. In addition to drinking water, cooling water, wastewater, and odor-control applications, chlorine dioxide has been applied successfully as a biocide in shingle-mat white-water systems. Effective microbial control can be obtained at or slightly above the chlorine dioxide demand. In addition, if fed correctly, chlorine dioxide should not affect the wet-end chemistry of the shingle-mat line.

Chlorine dioxide generation methods

Chlorine dioxide can be generated from sodium chlorite via two methods:

- Gaseous-chlorine method, illustrated in **Fig. 1** *(2)*
- Three-pump method, illustrated in **Fig. 2** *(3)*.

Each method can produce chlorine dioxide at a 90–95% efficiency rate, with 90–95% of the sodium chlorite converted to chlorine dioxide. The strength of the generated chlorine dioxide solution is usually within the range of 500–2000 ppm.

Gaseous-chlorine method

The gaseous-chlorine method of generating chlorine dioxide utilizes sodium chlorite as the precursor chemical and chlorine gas. This method is used when there are no back-pressure issues or when chlorine gas is preferred. The generation capacity is 0.227–6.81 kg/h.

The chemistry of the gaseous-chlorine method is as follows *(4)*.

$$2NaClO_2 + Cl_2 \rightarrow 2ClO_2 + 2NaCl$$

3. Feed header

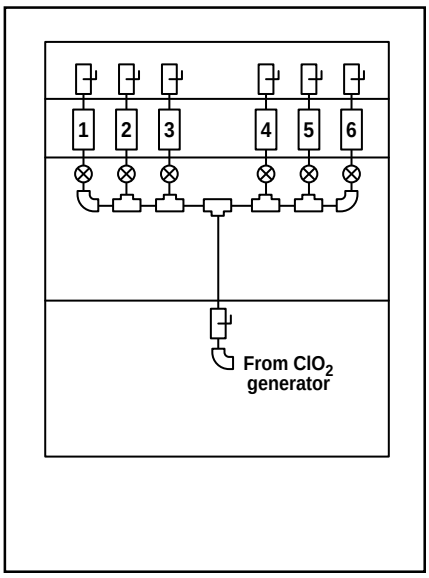

Based on the equation, 100% of the sodium chlorite should convert to chlorine dioxide. Realistically, the upper limit is about 90–95% percent conversion.

Chlorine dioxide is generated on an as-needed basis for immediate use. Water passes through the generator and past a chlorine ejector, which creates a vacuum. The vacuum pulls the chlorine gas into the water

I. SARA[a] guidelines for chlorine dioxide and precursor chemicals *(6)*

Chemical name	*TPQ (EHS)[b] (Sec. 302),lb*	*Reportable quantity (Sec. 304),lb*	*MSDS[c] (Sec. 311)*	*Tier I, II reports (Sec. 312),lb*	*Emissions reporting (Sec. 313)*
Sodium chlorite	...	...	Yes	>10,000	...
Hydrochloric acid	...	5,000	Yes	>10,000	Yes
Sodium hypochlorite	...	100	Yes	>10,000	...
Chlorine gas	100	10	Yes	100	Yes
Chlorine dioxide	...	...	Yes	>10,000	Yes

[a] Superfund Amendments and Reauthorization Act
[b]Threshold planning quantity (extremely hazardous substance)
[c] Material safety data sheet

stream, where it mixes with the sodium chlorite that is pumped into the bottom of the generator column. Inside the generator column, the chlorine and the sodium chlorite mix to form chlorine dioxide. The pH of the chlorine dioxide stream exiting the generator is typically 2.5–3.2.

Three-pump method

Chlorine dioxide can be generated without handling chlorine gas via the three-pump method. This method uses sodium chlorite, sodium hypochlorite, and hydrochloric acid. The three-pump method is utilized when there are back-pressure issues to consider or when handling of chlorine gas is restricted. The generator capacity is 0.227–9.08 kg/h.

The chemistry of the reaction is as follows *(5)*.

$$2NaClO_2 + NaOCl + 2HCl \rightarrow 2ClO_2 + 3NaCl + H_2O$$

As with the gaseous-chlorine method, 100% of the sodium chlorite should, theoretically, convert completely to chlorine dioxide. Again, the real rate of conversion is slightly lower, about 90–95%.

In the three-pump generator, the water stream carries the acid and sodium hypochlorite into the bottom of the generator column, where the sodium chlorite enters. All three chemicals are pumped into the water stream. The three chemicals mix inside the generator column to produce chlorine dioxide. The pH of the chlorine dioxide stream is typically 2.5–3.2.

In both chemical equations, NaCl is a product of the reaction. Chlorite and sometimes chlorate are also byproducts of the reaction.

Chlorine dioxide feed system

Chlorine dioxide is commonly fed directly from the generator to selected distribution points. It is possible to feed chlorine dioxide to more than one point until back-pressure or generator capacity limits are exceeded. The feed can be continuous or intermittent. In the latter case, the generator can be connected to a timer, creating numerous feed possibilities. **Figure 3** illustrates a feed header with six distribution points.

In shingle-mat white-water systems, chlorine dioxide can be fed to the broke, showers, silo, tray water, wire pit, seal pit, and/or saveall. The feed points will vary from plant to plant, depending on individual needs. It is important to optimize the chlorine dioxide feed by choosing feed points that provide effective microbial control.

Control and monitoring of chlorine dioxide

Manual measurement

There are many test methods available for measuring chlorine dioxide in the field. Drop count and spectrophotometric tests are available for measuring chlorine dioxide at very low levels in white-water systems. Most such tests can measure chlorine dioxide residuals as low as 0.10 ppm.

Generator efficiency is tested using the direct spectrophotometric test method or other tests. This test measures the chlorine dioxide level in the generator effluent in units of parts per million. To calculate generator efficiency, the actual chlorine dioxide generation rate is divided by the theoretical generation rate. Theo-

retically, 100% conversion from sodium chlorite to chlorine dioxide should occur, but 90–95% conversion is more realistic. If the calculations show less than 90% efficiency, the generator will need to be modified to increase its efficiency.

The biocidal effectiveness of chlorine dioxide in white-water systems is evaluated periodically by running microbiological tests. Two commonly used test methods include a dual-assay slide test and a total-plate-count test *(5)*. The total-plate-count test is more quantitative, while the dual-assay slide test simply gives a representative value for number of aerobic organisms present.

The objective of feeding chlorine dioxide to a shingle-mat white-water system is control of microbial growth. This prevents glass strings from forming on the mat, resulting in an off-spec product. Typically, microbial counts in white-water systems are controlled between 10^3–10^4, but this can vary slightly from plant to plant.

Automatic measurement

Automatic control and feed of chlorine dioxide can be achieved using ORP (oxidation–reduction potential). ORP readings can be correlated with chlorine dioxide residuals in the white-water system. Once this relationship has been established, ORP can be used to automatically control the chlorine dioxide feed. A timer could initiate chlorine dioxide feed until a predetermined ORP level is reached. Once the ORP level is achieved, the chlorine dioxide generator shuts off. This type of control system prevents overfeed of chlorine dioxide to the white-water system.

Chlorine dioxide safety and regulatory issues

Responsible use of industrial chemicals implies a knowledge of safe handling techniques and applicable regulatory issues. Proper handling of chlorine dioxide and precursor chemicals (sodium chlorite, sodium hypochlorite, chlorine, and hydrochloric acid) is essential. Relevant information is available on material-safety data sheets, product labels, and product data sheets.

Standard safety equipment—goggles, PVC or synthetic gloves, plastic apron, rubber boots, and hard hat—should be available at the generator location. Respiratory equipment also may be needed.

All piping for chlorine dioxide should be Schedule 80-PVC. Recommended elastomers include Viton® or Teflon®. All chlorine dioxide feed points must be below the water line to prevent off-gassing of chlorine dioxide.

While all of the precursor chemicals must be handled according to the instructions on the material-safety data sheets, sodium chlorite requires special mention because it can become combustible if allowed to dry to a powder. Sodium chlorite is stable in the liquid phase, but if it spills and dries to a powder, it must be washed down thoroughly with water. Sodium chlorite should not be stored on wooden pallets or allowed to come in contact with organic materials. All spills should be neutralized and disposed of in accordance with local, state, and federal regulations.

The regulatory issues associated with chlorine dioxide and its precursor chemicals are an essential consideration. **Table I** outlines the SARA regulations for chlorine dioxide, sodium chlorite, chlorine, sodium hypochlorite, and hydrochloric acid.

Summary

Chlorine dioxide is an effective biocide that can control microbial growth in shingle-mat white-water systems. Microbial counts can be controlled at levels between 10^3–10^4. Generation and distribution of chlorine dioxide is easily controlled manually or automatically. TJ

Literature cited

1. "Chlorine dioxide applications manual," Drew Industrial Division, Ashland Chemical, Inc., Boonton, NJ, 1992, Section 6, p. 4.
2. "Chlorine dioxide applications manual," Drew Industrial Division, Ashland Chemical, Inc., Boonton, NJ, 1992, Section 3, p. 5.
3. "Chlorine dioxide applications manual," Drew Industrial Division, Ashland Chemical, Inc., Boonton, NJ, 1992, Section 3, p. 9.
4. "Chlorine dioxide applications manual," Drew Industrial Division, Ashland Chemical, Inc., Boonton, NJ, 1992, Section 1, p. 5.
5. "Chlorine dioxide applications manual," Drew Industrial Division, Ashland Chemical, Inc., Boonton, NJ, 1992, Section 5, p. 2.
6. "Chlorine dioxide applications manual," Drew Industrial Division, Ashland Chemical, Inc., Boonton, NJ, 1992, Section 4.

Received for review Dec. 17, 1993.

Accepted Aug. 6, 1994.

Presented at the TAPPI 1994 Nonwovens Conference.

Restricted copyright held by Ashland Chemical Co., 1994.